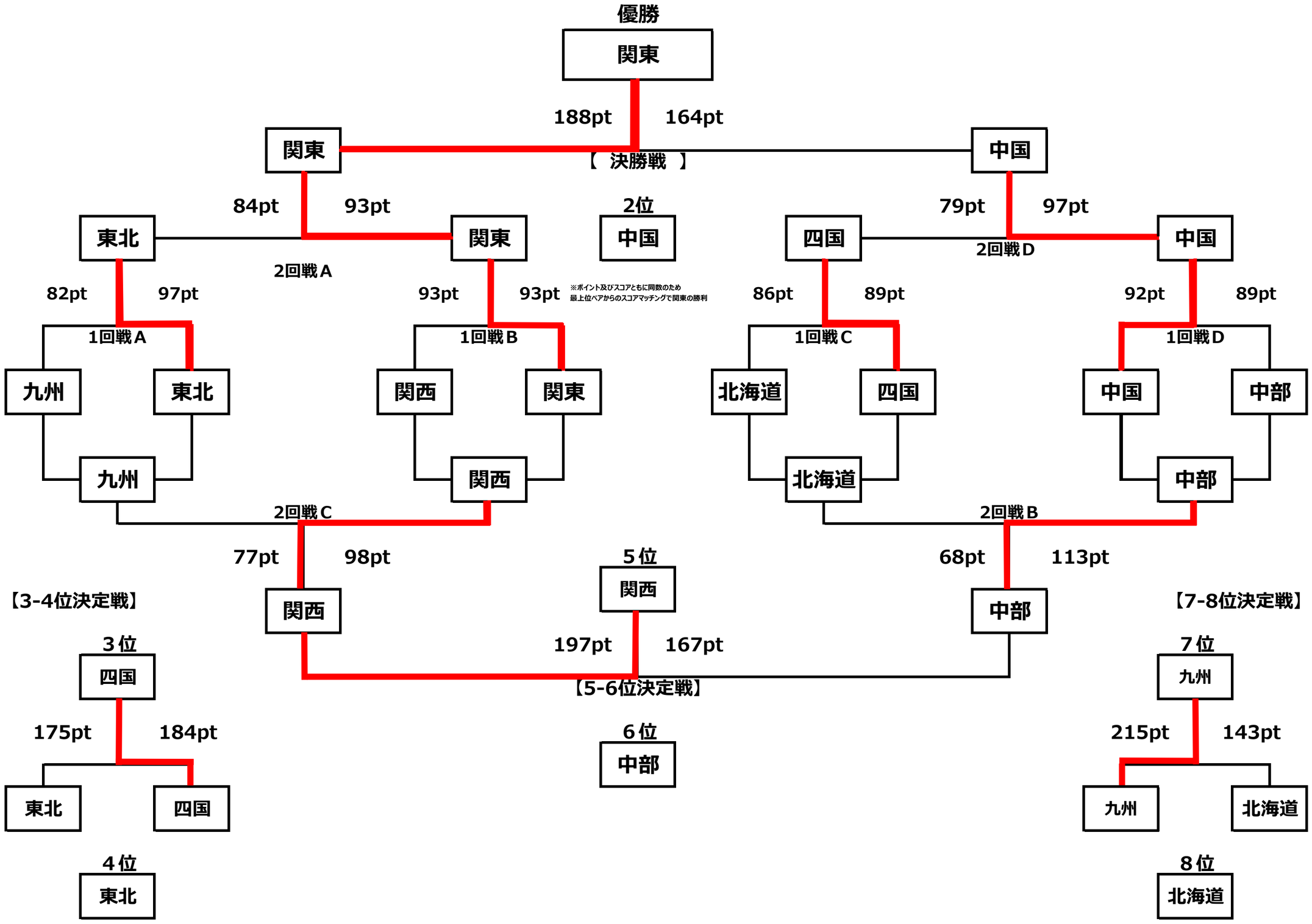PGA
JUNIOR CHAMPIONSHIP
TAIHEIYO CLUB CUP
2019